GitHub repository where all documentation & code can be found. billbill100 (github.com)

ESP32 3d print case V1.2 10/03/2026

To print the case.
There are four parts to print.
1) The main box (top sides & front).
2) Case bottom.

3) The rear panel, of which there are three options to choose from.
a) plain, which is the easiest to print.
b) the version with indented legends, labelling the sockets.
c) Third version has flat lettering. This requires a little more skill to print as the lettering needs to be selected and given a different colour to the box. Then the slicer needs setting so it prints all of the text first, followed by the rest of the rear panel.

4) The final part is the expansion board frame. (Not required for the pcb version).
There is also a blanking cap to print, for unused holes.

To Assemble. Four M3 X 25mm bolts go through the four holes in the front of the case.
On the inside, the TFT screen fits onto the bolts.

The expansion board frame (legs down) fit onto these bolts and it is all secured together with four washers and nuts.

The expansion board is mounted to the frame by drilling four small holes in the expansion frame, to match that of the expansion board itself, & attached with 2mm screws. The holes are not pre-drilled as expansion board hole positions can vary.

The 3d case is designed to be screwed together using 2mm self-tapping screws.

There is a lot of wiring to be connected (the pcb version negates some of this) and so it can be easier not to mount the expansion board until wiring is complete.

Main case

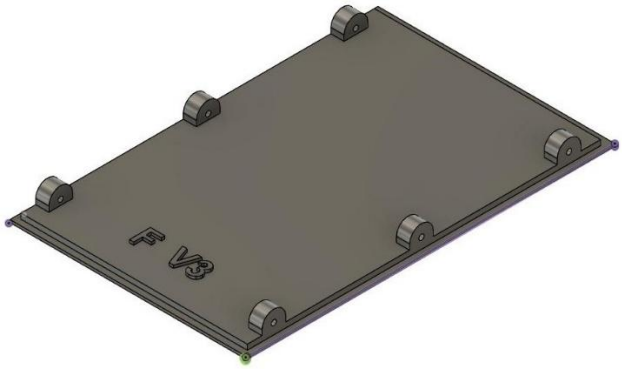

Rear

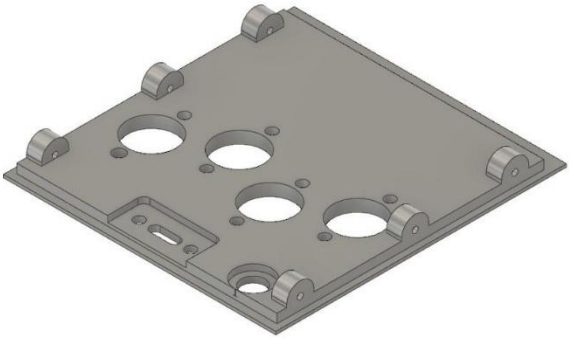

Back

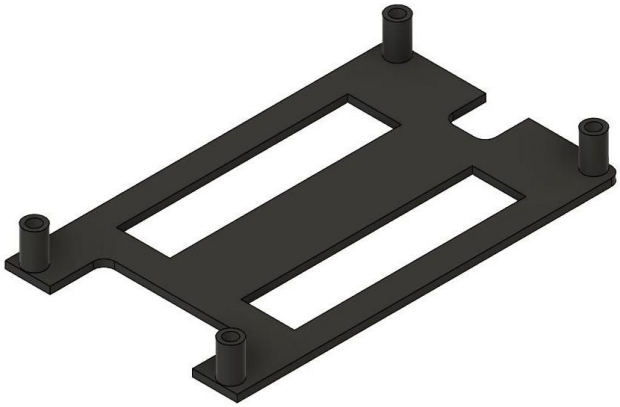

Expansion Frame

rear, showing option 3, with the colour printed legends.

Note – The case and enclosures are designed for the 13mm buttons, DIN sockets, USB cable and flash socket, as listed in the parts document.

Photos below showing the completed tester with sensor & Laser enclosure and base.
Additional build guides are available for these.

Camera Shutter Tester
Ver Esp32_4.1v_3
02 Feb 2026
BUTTONS
White : Averages
Yellow : Interval
Green : Lightmeter
Red : LED Tester
Black : Setup & Align
Blue : Shutter Speed
Orange : Shutter Speed

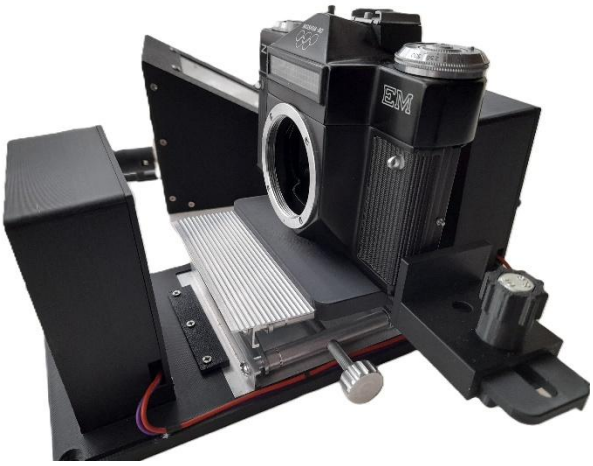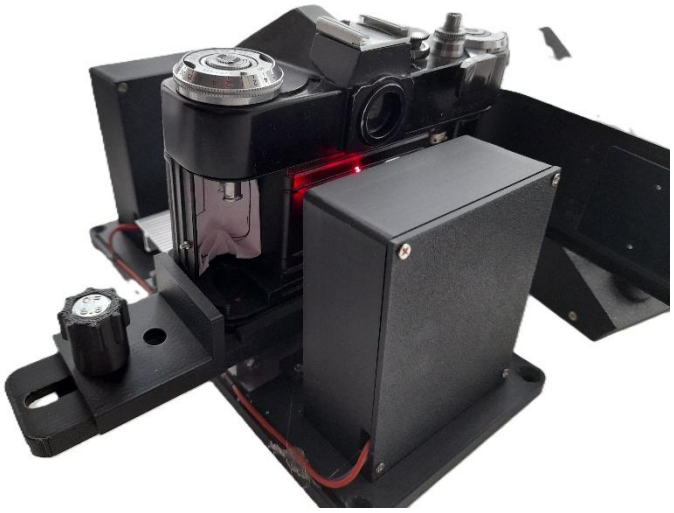
EM